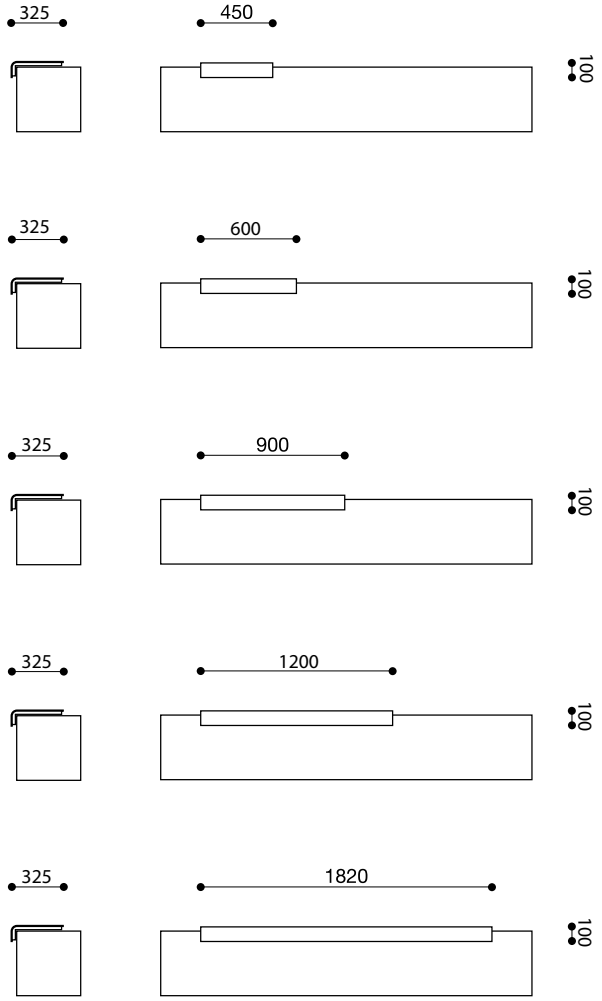

Convex

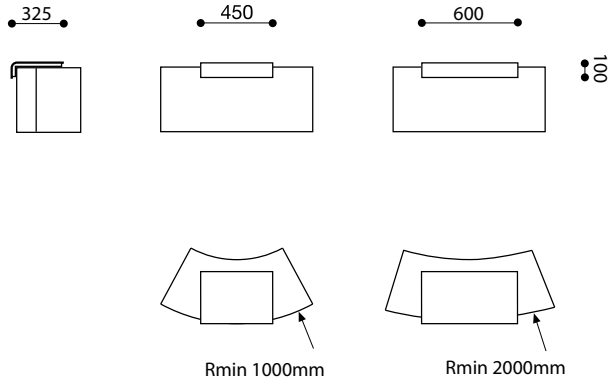

out-sider A/S
Kigkurren 8A, Islands Brygge
DK-2300 Copenhagen S

info@out-sider.dk
+45 2261 7420
www.out-sider.dk